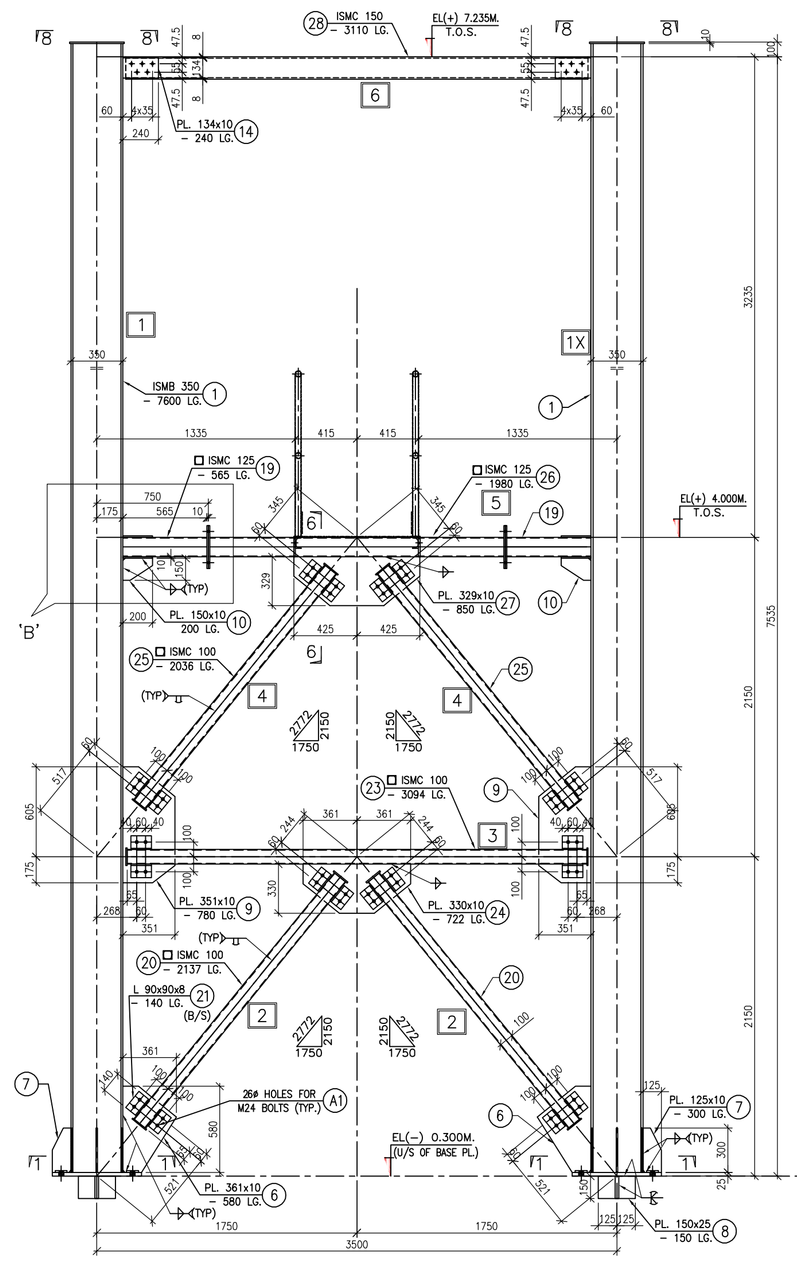

1 NO. EACH TRESTLE REQD. AS DRN. & NOTED MKD. TR–20 TO 24

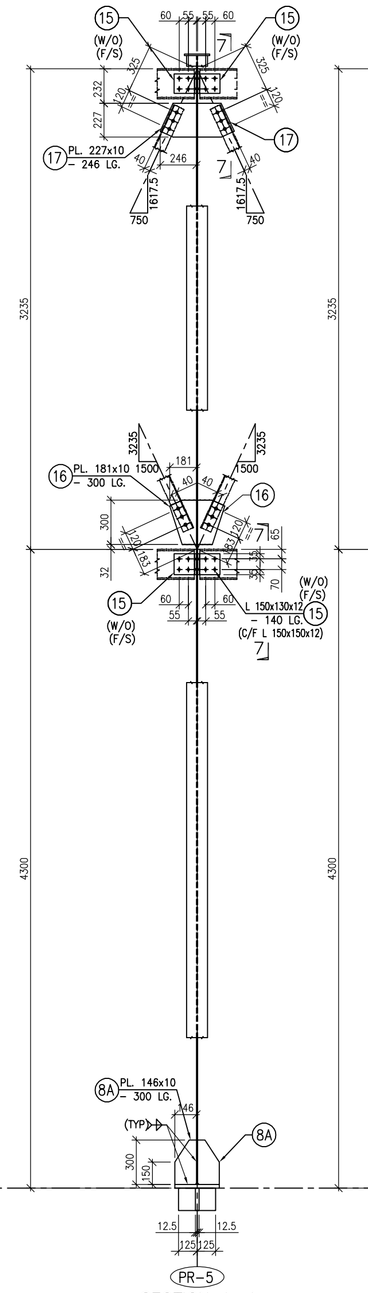

SECTION A–A (FOR TR–20)

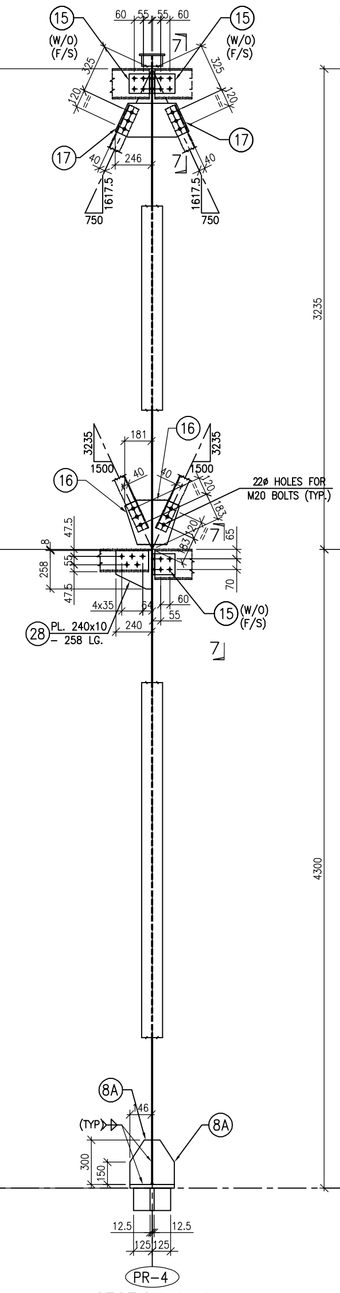

SECTION A–A (FOR TR–21)

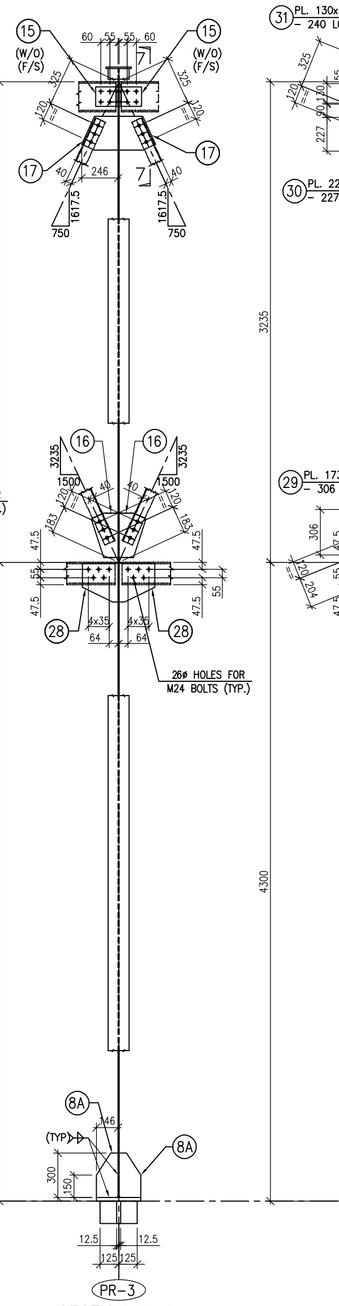

SECTION A–A (FOR TR–22)

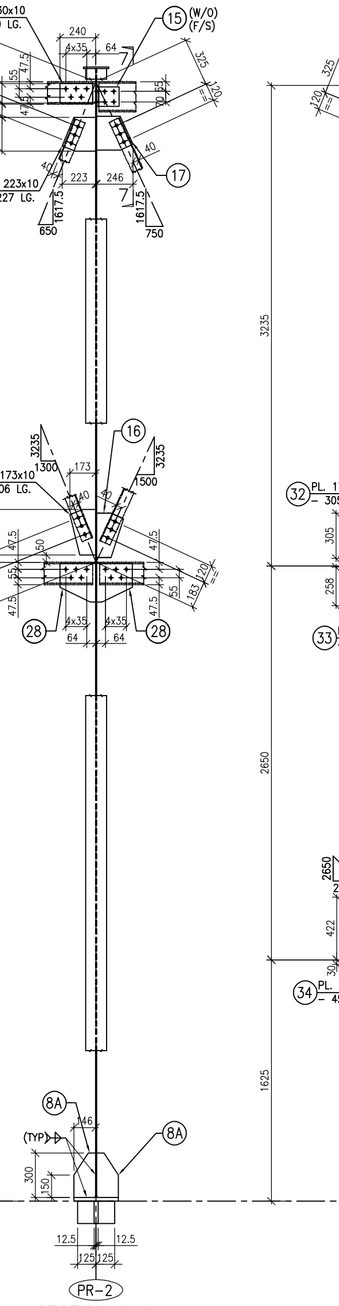

SECTION A–A (FOR TR–23)

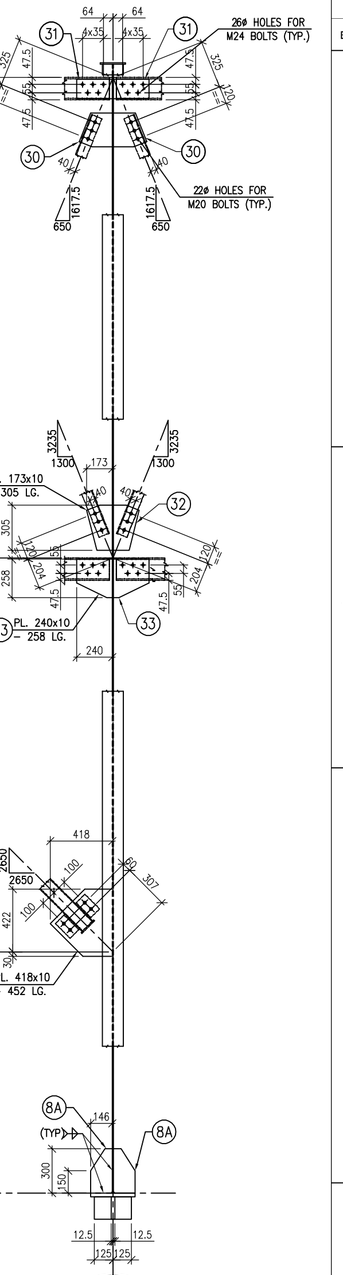

SECTION A–A (FOR TR–24)

BILL OF MATERIALS PART-I

ERECTION MKD.	BOX NO	ITEM NO.	SECTION	LENGTH	Qty FOR ONE ASSEMBLY	UNIT WT. (Kgs)	WEIGHT FOR ONE ASSEMBLY (Kgs)	NOS. OF ASSEMBLY	QTY. FOR TOTAL ASSEMBLY	AREA	WEIGHT FOR TOTAL ASSEMBLY (Kgs)	EREC. MKD. WT.(Kgs.)	REMARKS
TR-20	1,1X	1	ISHB 350	7600	1	52.40	398.24		2		796.48		
		2	PL.300x25	600	1	196.25	35.33		2		70.65		
		3	PL.80x12	80	4	94.20	2.41		8		4.82		
		4	PL.80x10	300	4	78.50	7.54		8		15.07		
		5	PL.112.5x25	150	1	196.25	3.31		2		6.62		
		6	PL.361x10	580	1	78.50	16.44		2		32.87		
		7	PL.125x10	300	1	78.50	2.94		2		5.89		
		8	PL.150x25	150	1	196.25	4.42		2		8.83		
		8A	PL.146x10	300	2	78.50	6.88		4		13.75		
		9	PL.351x10	780	1	78.50	21.49		2		42.98		
		10	PL.150x10	200	1	78.50	2.36		2		4.71		
		11	PL.100x10	200	1	78.50	1.57		2		3.14		
		12	PL.150x10	200	1	78.50	2.36		2		4.71		
		13	PL.285x10	290	1	78.50	6.49		2		12.98		
		14	PL.134x10	240	1	78.50	2.52		2		5.05		
		15	L150x130x12	140	4	27.30	15.29		8		30.58		(C/F L.150x150x12)
		16	PL.181x10	300	2	78.50	8.53		4		17.05		
		17	PL.227x10	246	2	78.50	8.77		4		17.53		
		18	PL.170x10	330	1	78.50	5.07		2		10.14		
		19	ISMC 125	565	2	13.10	14.80		4		29.61		
							568.74	2			1133.47	1133.47	
TR-20 TO 24	2	20	ISMC 100	2137	2	9.56	40.88		20		400.59		
		21	L90x90x8	140	8	10.80	12.10		80		120.96		
		22	PL.55x8	120	4	62.80	1.66		40		16.50		
							54.61	2x5			546.13	546.13	
	3	23	ISMC 100	3094	2	9.56	59.16		10		295.79		
		21	L90x90x8	140	8	10.80	12.10		40		60.40		
		22	PL.55x8	120	4	62.80	1.66		20		8.29		
		24	PL.332x10	722	1	78.50	18.70		5		93.52		
							91.61	1x5			458.07	458.07	
	4	25	ISMC 100	2036	2	9.56	38.93		20		389.28		
		21	L90x90x8	140	8	10.80	12.10		80		120.96		
		22	PL.55x8	120	4	62.80	1.66		40		16.50		
							52.68	2x5			526.82	526.82	
	5	26	ISMC 125	1980	2	13.10	51.88		10		259.38		
		13	PL.285x10	290	2	78.50	12.98		10		64.88		
		27	PL.329x10	850	1	78.50	21.95		5		109.76		
							86.80	1x5			434.02	434.02	
TR-21	1,1X	1	ISHB 350	7600	1	52.40	398.24		2		796.48		
		2	PL.300x25	600	1	196.25	35.33		2		70.65		
		3	PL.80x12	80	4	94.20	2.41		8		4.82		
		4	PL.80x10	300	2	78.50	3.77		4		7.54		
		5	PL.112.5x25	150	1	196.25	3.31		2		6.62		
		6	PL.361x10	580	1	78.50	16.44		2		32.87		
		7	PL.125x10	300	1	78.50	2.94		2		5.89		
		8	PL.150x25	150	1	196.25	4.42		2		8.83		
		8A	PL.146x10	300	2	78.50	6.88		4		13.75		
		9	PL.351x10	780	1	78.50	21.49		2		42.98		
		10	PL.150x10	200	1	78.50	2.36		2		4.71		
		11	PL.100x10	200	1	78.50	1.57		2		3.14		
		12	PL.150x10	200	1	78.50	2.36		2		4.71		
		13	PL.285x10	290	1	78.50	6.49		2		12.98		
		14	PL.134x10	240	1	78.50	2.52		2		5.05		
		15	L150x130x12	140	3	27.30	11.47		6		22.93		(C/F L.150x150x12)
		16	PL.181x10	300	2	78.50	8.53		4		17.05		
		17	PL.227x10	246	2	78.50	8.77		4		17.53		
		18	PL.170x10	330	1	78.50	5.07		2		10.14		
		19	ISMC 125	565	2	13.10	14.80		4		29.61		
		20	PL.240x10	258	2	78.50	4.06		2		9.72		
							564.01	2			1128.01	1128.01	
TR-22	1,1X	1	ISHB 350	7600	1	52.40	398.24		2		796.48		
		2	PL.300x25	600	1	196.25	35.33		2		70.65		
		3	PL.80x12	80	4	94.20	2.41		8		4.82		
		4	PL.80x10	300	2	78.50	3.77		4		7.54		
		5	PL.112.5x25	150	1	196.25	3.31		2		6.62		
		6	PL.361x10	580	1	78.50	16.44		2		32.87		
		7	PL.125x10	300	1	78.50	2.94		2		5.89		
		8	PL.150x25	150	1	196.25	4.42		2		8.83		
		8A	PL.146x10	300	2	78.50	6.88		4		13.75		
		9	PL.351x10	780	1	78.50	21.49		2		42.98		
		10	PL.150x10	200	1	78.50	2.36		2		4.71		
		11	PL.100x10	200	1	78.50	1.57		2		3.14		
		12	PL.150x10	200	1	78.50	2.36		2		4.71		
		13	PL.285x10	290	1	78.50	6.49		2		12.98		
		14	PL.134x10	240	1	78.50	2.52		2		5.05		
		15	L150x130x12	140	3	27.30	11.47		6		22.93		(C/F L.150x150x12)
		16	PL.181x10	300	2	78.50	8.53		4		17.05		
		17	PL.227x10	246	2	78.50	8.77		4		17.53		
		18	PL.170x10	330	1	78.50	5.07		2		10.14		
		19	ISMC 125	565	2	13.10	14.80		4		29.61		
		20	PL.240x10	258	2	78.50	9.72		4		19.44		
		21	L90x90x8	140	8	10.80	12.10		16		193.60		
		22	PL.55x8	120	4	62.80	1.66		8		13.28		
							564.01	2			1128.01	1128.01	

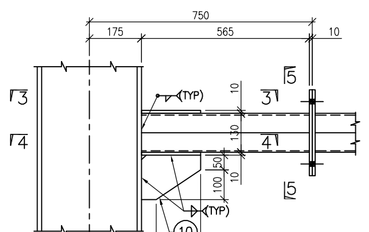

DETAIL–B

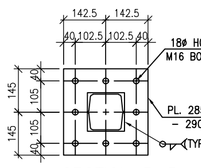

SECTION 5–5

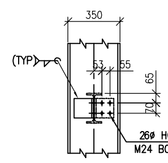

SECTION 7–7

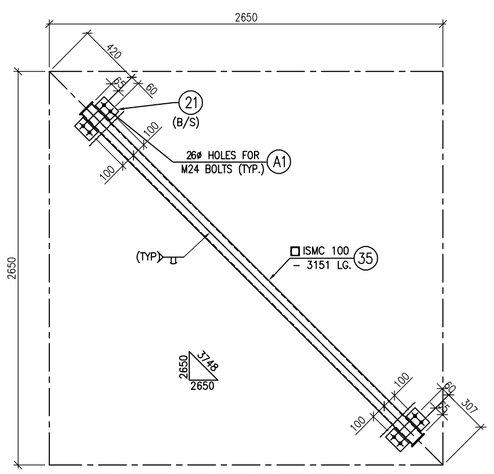

2 NOS. COLUMN BRCG. REQD. AS DRN. MKD. CBR–1

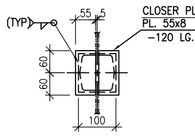

TYP. COVER PL. DETAIL OF BOX MC 100

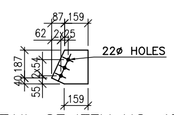

DETAIL OF ITEM NO. 17

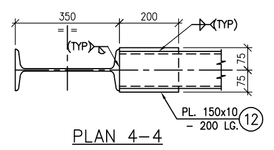

PLAN 4–4

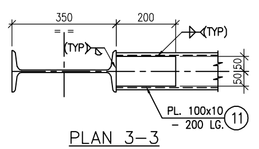

PLAN 3–3

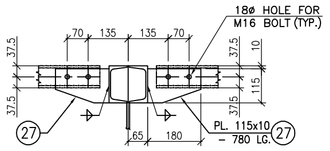

SECTION 6–6

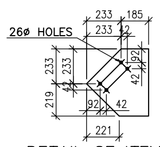

DETAIL OF ITEM NO. 34

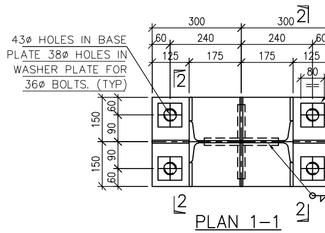

PLAN 1–1

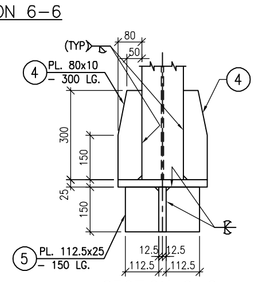

SECTION 2–2

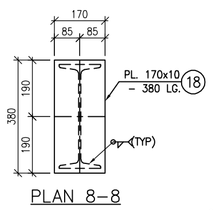

PLAN 8–8

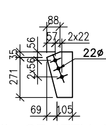

DETAIL OF ITEM NO. 29

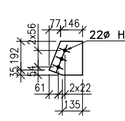

DETAIL OF ITEM NO. 30

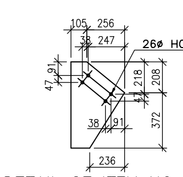

DETAIL OF ITEM NO. 6

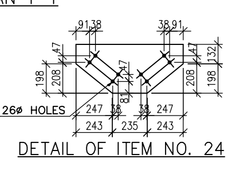

DETAIL OF ITEM NO. 24

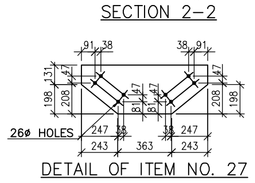

DETAIL OF ITEM NO. 27

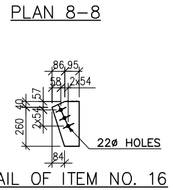

DETAIL OF ITEM NO. 16

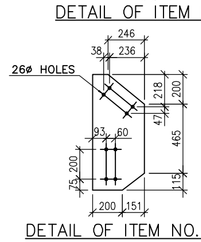

DETAIL OF ITEM NO. 9

BILL OF MATERIALS PART-II

ERECTION MKD.	BOX NO	ITEM NO.	SECTION	LENGTH	Qty FOR ONE ASSEMBLY	UNIT WT. (Kgs)	WEIGHT FOR ONE ASSEMBLY (Kgs)	NOS. OF ASSEMBLY	QTY. FOR TOTAL ASSEMBLY	AREA	WEIGHT FOR TOTAL ASSEMBLY (Kgs)	EREC. MKD. WT.(Kgs.)	REMARKS
TR-23	1,1X	1	ISHB 350	7600	1	52.40	398.24		2		796.48		
		2	PL.300x25	600	1	196.25	35.33		2		70.65		
		3	PL.80x12	80	4	94.20	2.41		8		4.82		
		4	PL.80x10	300	2	78.50	3.77		4		7.54		
		5	PL.112.5x25	150	1	196.25	3.31		2		6.62		
		6	PL.361x10	580	1	78.50	16.44		2		32.87		
		7	PL.125x10	300	1	78.50	2.94		2		5.89		
		8	PL.150x25	150	1	196.25	4.42		2		8.83		
		8A	PL.146x10	300	2	78.50	6.88		4		13.75		
		9	PL.351x10	780	1	78.50	21.49		2		42.98		
		10	PL.150x10	200	1	78.50	2.36		2		4.71		
		11	PL.100x10	200	1	78.50	1.57		2		3.14		
		12	PL.150x10	200	1	78.50	2.36		2		4.71		
		13	PL.285x10	290	1	78.50	6.49		2		12.98		
		14	PL.134x10	240	1	78.50	2.52		2		5.05		
		15	L150x130x12	140	1	27.30	3.82		2		7.64		(C/F L.150x150x12)
		16	PL.181x10	300	1	78.50	4.26		2		8.53		
		17	PL.227x10	246	1	78.50	4.39		2		8.77		
		18	PL.170x10	330	1	78.50	5.07		2		10.14		
		19	ISMC 125	565	2	13.10	14.80		4		29.61		
		28	PL.240x10	258	2	78.50	9.72		4		19.44		
		29	PL.173x10	306	1	78.50	4.16		2		8.31		
		30	PL.223x10	227	1	78.50	3.97		2		7.95		
		31	PL.130x10	240	1	78.50	2.45		2		4.90		
							563.16	2			1126.31	1126.31	
TR-24	1,1X	1	ISHB 350	7600	1	52.40	398.24		2		796.49		
		2	PL.300x25	600	1	196.25	35.33		2		70.65		
		3	PL.80x12	80	4	94.20	2.41		8		4.82		
		4	PL.80x10	300	2	78.50	3.77		4		7.54		
		5	PL.112.5x25	150	1	196.25	3.31		2		6.62		
		6	PL.361x10	580	1	78.50	16.44		2		32.87		
		7	PL.125x10	300	1	78.50	2.94		2		5.89		
		8	PL.150x25	150	1	196.25	4.42		2		8.83		
		8A	PL.146x10	300	2	78.50	6.88		4		13.75		
		9	PL.351x10	780	1	78.50	21.49		2		42.98		
		10	PL.150x10	200	1	78.50	2.36		2		4.71		
		11	PL.100x10	200	1	78.50	1.57		2		3.14		
		12	PL.150x10	200	1	78.50	2.36		2		4.71		
		13	PL.285x10	290	1	78.50	6.49		2		12.98		
		14	PL.134x10	240	1	78.50	2.52		2		5.05		
		18	PL.170x10	330	1	78.50	5.07		2		10.14		
		19	ISMC 125	565	2	13.10	14.80		4		29.61		
		30	PL.223x10	227	2	78.50	7.95		4		15.89		
		31	PL.130x10	240	2	78.50	4.90		4		9.80		
		32	PL.173x10	305	2	78.50	8.29		4		16.57		
		33	PL.240x10	258	2	78.50	9.72		4		19.44		
		34	PL.418x10	452	1	78.50	14.93		2		29.86		
							576.07	2			1152.14	1152.14	
CBR-1		35	ISMC 100	3151	2	9.56	60.28		4		120.49		
		21	L90x90x8	140	8	10.80	12.10		16		24.19		
		22	PL.55x8	120	4	62.80	1.66		8		3.32		
							74.00	2			148.00	148.00	

TOTAL WEIGHT 7783.08 KG. = 7.783 T.

BOLT SCHEDULE

FASTENER NO.	HEX BOLTS					HEX NUT	WEIGHT
	SIZE	BOLT TYPE	BOLT CLASS	NOMINAL LENGTH	TOTAL NOS.	TOTAL NOS. REQUIRED	Weight (kg.)
A1	M24	P	P.C. 8.8	65	176	176	61.952
B1	M16	P	P.C. 4.6	50	80	80	8.48
					TOTAIL WEIGHT=		70.432

ABSTRACT

SL.NO	SECTION	TOTAL WT.	MATL.SPCN
1	ISMB 350	3982.40	IS: 2062-2006 GR-A
2	ISMC 125	407.41	IS: 2062-2006 GR-A
3	ISMC 100	1214.16	IS: 2062-2006 GR-A
4	L150x130x12	76.44	IS: 2062-2006 GR-A
5	L90x90x8	326.59	IS: 2062-2006 GR-A
6	PL. 25 THK.	430.52	IS: 2062-2006 GR-A
7	PL. 12 THK.	24.12	IS: 2062-2006 GR-A
8	PL. 10 THK.	1276.67	IS: 2062-2006 GR-A
9	PL. 8 THK.	44.76	IS: 2062-2006 GR-A
	TOTAL WT. =	7783.08	Kgs.

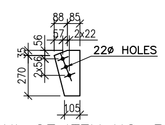

DETAIL OF ITEM NO. 32

NOTES

1. MARKING & GENERAL NOTES REFF. DRAWING NO. 0–96134–1–0001

REV	DATE	DRN	CHD	APPD	DESCRIPTION/NOTE

CUSTOMER CONSULTANT:
FICHTNER
M/s FICHTNER GmbH & Co KG, Stuttgart, GERMANY

CUSTOMER/PROJECT:
BANGLADESH–INDIA FRIENDSHIP POWER COMPANY PVT. LTD, DHAKA, BANGALADESH
2x660 MW MAITREE STPP, RAMPAL, BANGLADESH

	NAME	DATE.
DRN.		
CHD.		
APPD.		

DETAIL ENGG CONSULTANT:

VENDOR DRAWING No.–

भारत हेवी इलेक्ट्रिकल्स लिमिटेड
हैदराबाद
BHARAT HEAVY ELECTRICALS LTD.
HYDERABAD

	NAME	SIGN.	DATE	NO.OF VAR.
DRN.	SME/RAMAPADA		08.11.19	
CHD.	SANTANU			
APPD.	M.K.JHA			

DEPT.	SCALE	WEIGHT (KG)	REF. TO ASSY DRG.	ITEM NO.	NO.OF ITEMS
OR	NTS				
CODE 4430					

TITLE: FLY ASH PIPE RACK
DETAIL OF TRESTLE & COL. BRCG. MKD. TR–20 TO TR–25 & CBR–1

DRAWING NO. 0-96134-1-0034 | REV. 00

SHEET NO. 01 | NO OF SHEETS 01